AVENPORTA

ARCHITECTURAL DOOR SYSTEMS

Manual for the Transportation, Storage, Installation and Use of Door Leaves and Their Components

www.Avenporta.com |

OPERATING CONDITIONS

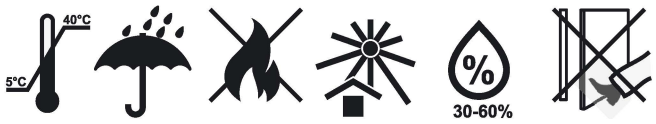

Temperature: 5 to 40°C.
Relative humidity: 30% to 60%.
Avoid direct contact with water and fire, and exposure to direct sunlight. Avoid rough mechanical impact on the door.

TRANSPORTATION

Doors must be transported in containers, on pallets or on other supports that protect them against damage, moisture, precipitation and direct sunlight.

INSTALLATION SEQUENCE

1. Inspect the appearance of the door leaves and frame-and-trim components at the time of purchase and before installation, before mortising for locks and hinges.
2. The door unit must be installed by appropriately trained and qualified specialists.
3. In buildings under construction or undergoing renovation, install doors only after all building materials have dried completely.
4. **Do not use sealing compounds**, including acrylic and/or silicone sealants or other silicone-containing materials, when assembling or installing door leaves, frames, portals and architraves.
5. Keep the doors in the room where they will be installed for **3-4 days before installation**, as recommended, to allow their temperature and moisture conditions to equilibrate.

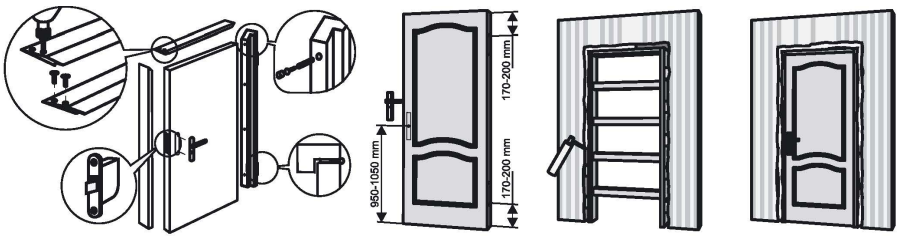

Upper and lower hinges: **170-200 mm** from the corresponding edge. Handle height: **950-1050 mm**.

Installation work: **STB 2433-2015** and **TKP 45-3.02-223**.

INSTALLATION OF FRAME EXTENSIONS

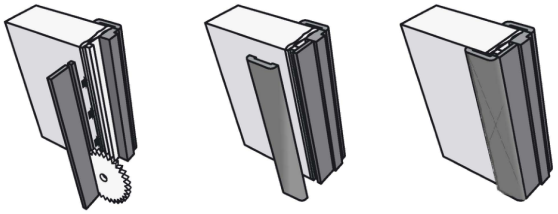

Installation details and warranty

INSTALLATION OPTIONS WITH FRAME EXTENSION PANELS

Wall thickness: 75 mm

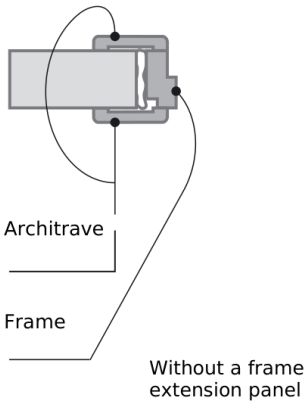

Wall thickness: 75-265 mm

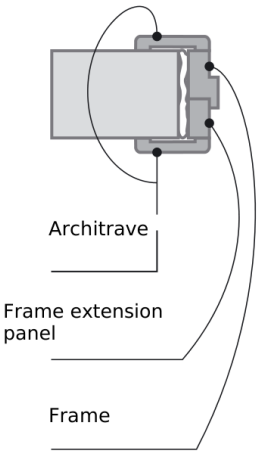

Wall thickness: 265-1000 mm

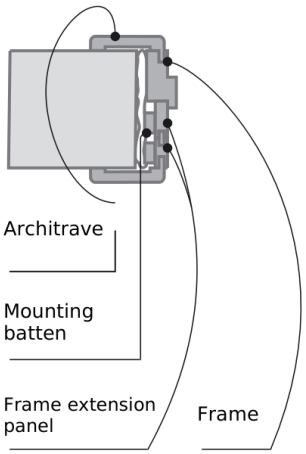

MAINTENANCE

Cleaning products must not contain abrasives or solvents. Any aerosol product intended for the care of wooden furniture may be used to add shine and freshness to the surface, in accordance with the product's instructions.

OPERATIONAL SAFETY

Do not strike the door glass with any object that could cause it to break. Keep body parts clear of the gap between the door leaf and frame to prevent trapping.

MANUFACTURER'S WARRANTY

Warranty period: **24 months from the date of dispatch to the consumer.**

The manufacturer is not responsible for defects that arise after the product has been transferred to the consumer as a result of:

• Failure to comply with transportation, use or care requirements.

• Poor-quality installation or repair work performed by third parties.

• Natural wear, including scuffing, scratches, dents, chips, loosening of hinges, locks or handles, and changes in colour.

• Unauthorised modifications to the product's design.

To submit a claim, provide: this Manual for the Transportation, Storage, Installation and Use of Door Leaves and Their Components, a copy of the sales receipt and a written claim.

The manufacturer reserves the right to change the technology and design of its products, as well as the materials used.

Applicable specifications

Door assemblies: **STB 2433-2015**, "Door assemblies. General specifications."

Door leaves: technical specifications (TU), "Internal wooden door leaves." No TU reference number is stated in the source.

Door frame components: **TU 190007727.003-2016**, "Door frame components."

Architraves: **STB 1074-2009**, "Profiled components made of timber and wood-based materials for construction. Specifications."